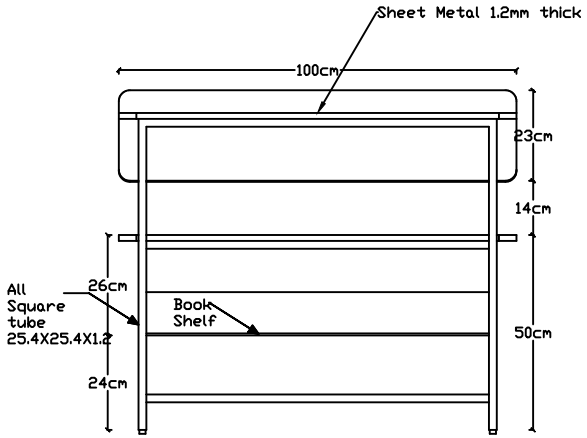


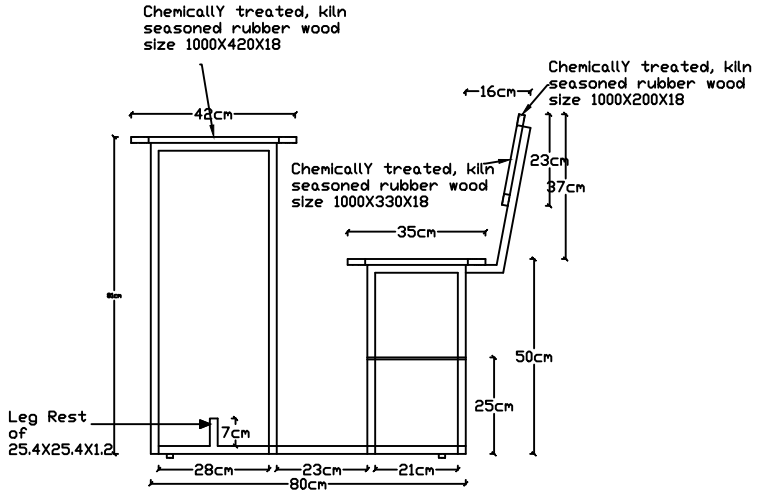


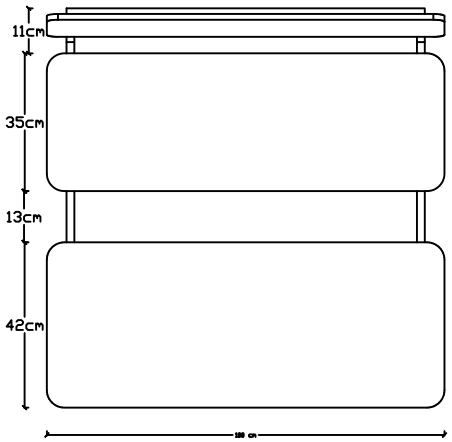


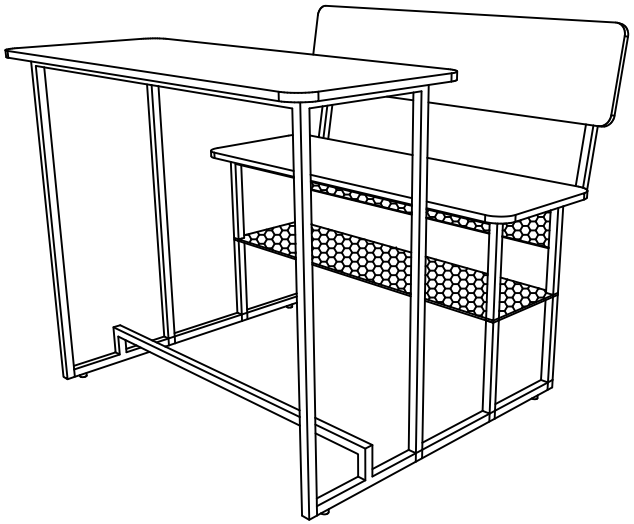

NOTES :-

1. ALL DIMENSIONS ARE IN CM. UNLESS MENTIONED OTHERWISE.
2. ALL DIMENSIONS ARE TO BE READ ONLY AND NOT TO BE MEASURED/ SCALED.

PRINTS ISSUE LOG

| REV.No. | REVISION DETAIL | DATE |
|---|---|---|
| | | |
| | | |
| | | |
| | | |
| | | |

ENGINEERING WORKS DEPARTMENT
INDIAN INSTITUTE OF TECHNOLOGY
**PALAKKAD**

DWG TITLE: 2 SEATER DESK CUM BENCH

NORTH

DRAWING

| | | | |
|---|---|---|---|
| DRAWN BY | | CHECKEDBY | |
| DATE | | SCALE | |
| SHEET SIZE | | SHEETS | |
| Drawing No. | 1 | | REV. NO. |